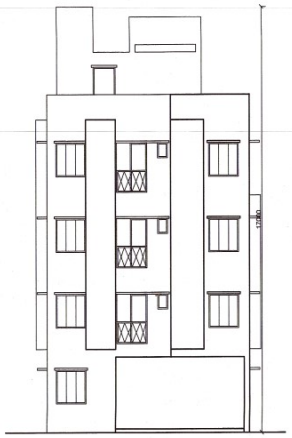

FRONT ELEVATION
SCALE 1:100

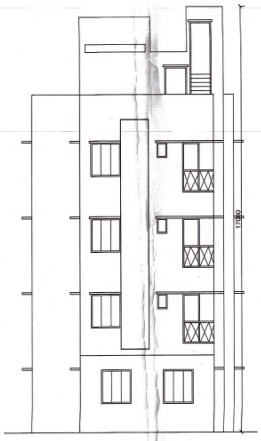

REAR ELEVATION
SCALE 1:100

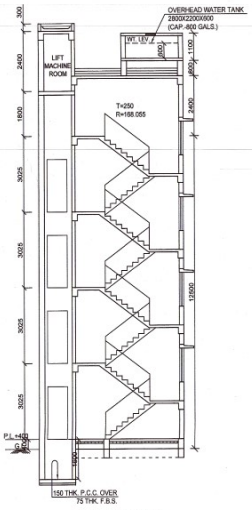

SECTION AT-AA
SCALE 1:100

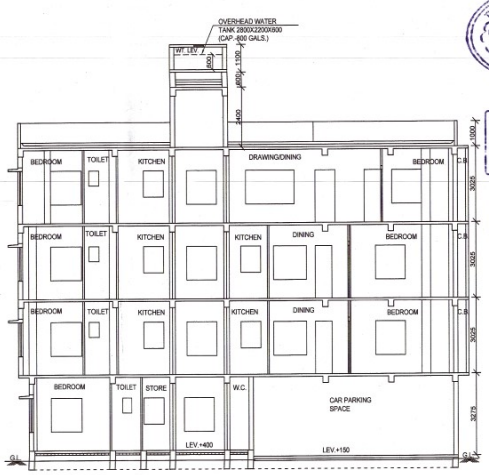

SECTION AT-BB
SCALE 1:100

EXISTING SITE PLAN
SCALE - 1:300

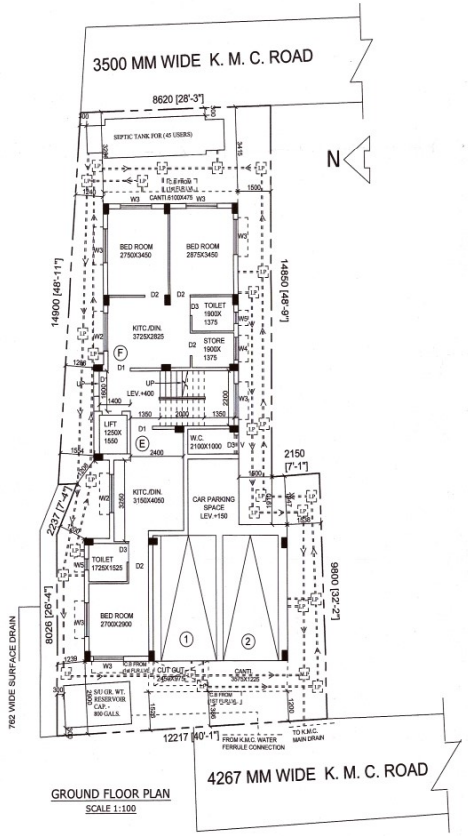

GROUND FLOOR PLAN
SCALE 1:100

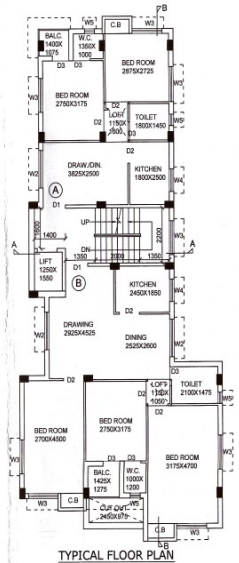

TYPICAL FLOOR PLAN
(1ST,2ND)
SCALE 1:100

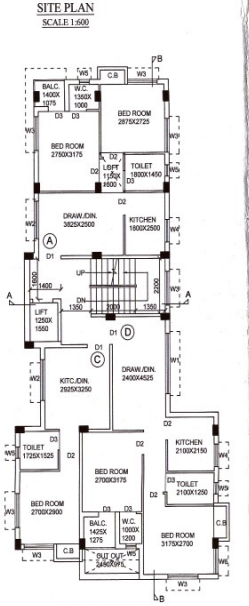

3RD FLOOR PLAN
SCALE 1:100

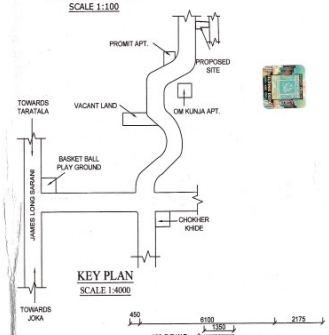

KEY PLAN
SCALE 1:4000

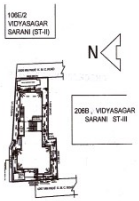

SITE PLAN
SCALE 1:600

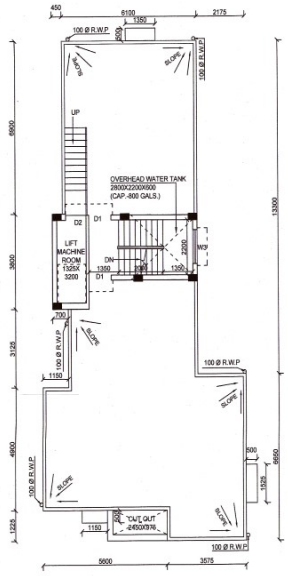

ROOF PLAN
SCALE 1:100

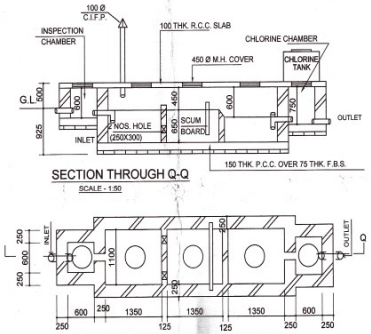

SECTION THROUGH Q-Q
SCALE - 1:50

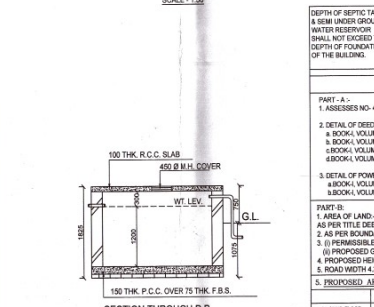

DETAIL OF SEPTIC TANK(45 USERS)
SCALE - 1:50

SECTION THROUGH P-P

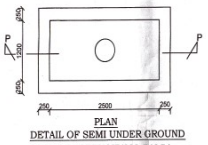

PLAN
DETAIL OF SEMI UNDER GROUND WATER RESERVOIR(800 GALS.)
SCALE - 1:50

DEPTH OF SEPTIC TANK & SEMI UNDER GROUND WATER RESERVOIR SHALL NOT EXCEED THE DEPTH OF FOUNDATION OF THE BUILDING.

DOORS & WINDOWS SCHEDULE

DOORS MKD	WIDTH	HEIGHT	WINDOWS MKD	WIDTH	HEIGHT
D1	1000	2100	W1	2400	1350
D2	900	2100	W2	1500	1350
D3	750	2100	W3	1350	1350
			W4	900	1350
			W5	450	600
			W6	1025	1350

SPECIFICATION

1. CEMENT CONC. TO FDN.–1:1.1/2:3; CEMENT : SAND : AGGR. 1:2:4; CEMENT : SAND : AGGR.
2. CEMENT CONC. TO SLAB,BEAM,CHAJJA & COLUMN
3. CEMENT MORTAR TO FDN. & MAIN WALL – 1:6
4. CEMENT MORTAR TO 75 THK. & 125 THK WALL & CEILING – 1:4
5. CEMENT MORTAR TO INSIDE & OUTSIDE WALL PLASTER – 1:6
6. CEMENT CONCRETE TO FLOOR – 1:1.1/2:3
7. R.C.C GRADE M20 AND STEEL Fe 415

CERTIFY WITH FULL RESPONSIBILITY THAT THE BUILDING PLAN HAS BEEN DRAWN UP AS PER PROVISION OF K.M.C. BUILDING RULES'2009,AS AMENDED FROM TIME TO TIME & THAT THE SITE CONDITION INCLUDING WIDTH OF ABUTTING ROAD (MAINTAINED BY K.M.C.) CONFIRM WITH THE PLAN WHICH HAS BEEN MEASURED & VERIFIED BY ME,IT IS A BUILDABLE SITE,NOT A TANK OR FILLED UP A TANK.THE LAND IS DEMARCATED BY BOUNDARY WALL.THE CONSTRUCTION OF U.G.WATER TANK & SEPTIC TANK WILL BE COMPLETED BEFORE STARTING OF BUILDING FOUNDATION WORK.

Ranjit Bhattacharya
REG. NO. CA/87/10587

RANJIT BHATTACHARYA
REG. NO. CA/87/10587
SIGNATURE OF ARCHITECT

THIS STRUCTURAL DESIGN & DRAWING OF BOTH FOUNDATION & SUPERSTRUCTURE OF THE BUILDING HAS BEEN MADE BY MR(S.S. ASSOCIATES) OF 501, EB–9, RAJDANGA MAIN ROAD, KOLKATA –700107, ON BASIS OF SOIL TEST REPORT DONE BY (S.S. ASSOCIATES) 501, EB–9, RAJDANGA MAIN ROAD, KOLKATA –700107 CONSIDERING ALL POSSIBLE LOADS INCLUDING THE SEISMIC LOAD AS PER N.B.C OF INDIA(LATEST REVISION) & CERTIFIED THAT IT IS SAFE & STABLE IN ALL RESPECT.

SUSANTA SAHA
B.E (CIVIL), MS (Structural Engg.)
ESE – Class – I, No. 70, KMC
MIE Regn. No.- M1E28970/
B/TE – 9/19, KMC
Chartered Engineer
Mobile : 8777254375, 9433085907

SUSHANTA SAHA
E.S.E/I/70
SIGNATURE OF STRUC. ENGG.

UNDERSIGNED HAS INSPECTED THE SITE AND CARRIED OUT SOIL INVESTIGATION THEREON. IT IS CERTIFIED THAT THE EXISTING SOIL OF THE SITE IS ABLE TO CARRY THE LOAD COMING FROM THE PROPOSED CONSTRUCTION AND THE FOUNDATION SYSTEM PROPOSED HEREIN IS SAFE & STABLE IN ALL RESPECT FROM GEO-TECHNICAL POINT OF VIEW.

SUSANTA SAHA
B.E. (CIVIL), MS (Structural Engg.)
ESE – Class – I, No. 70, KMC
MIE Regn. No.- M1E28970/
B/TE – 9/19, KMC
Chartered Engineer
Mobile : 8777254375, 9433085907

SIGNATURE OF GEO-TECHNICAL

I/WE,DO HEREBY DECLERE WITH FULL RESPONSIBILITY THAT I/WE SHALL ENGAGE L.B.A. & E.S.E DURING CONSTRUCTION OF THE BUILDING(AS PER B.S PLAN) K.M.C AUTHORITY WILL NOT BE RESPONSIBLE FOR STRUCTURAL STABILITY OF THE BUILDING AND ADJOINING STRUCTURES IF ANY SUBMITTED DOCUMENTS ARE FOUND TO BE FAKE,IF K.M.C AUTHORITY WILL REVOKE THE SANCTION PLAN. THE CONSTRUCTION OF WATER RESERVOIR & SEPTIC TANK WILL BE UNDERTAKEN UNDER THE GUIDANCE OF L.B.A/E.S.E BEFORE STARTING OF BUILDING FOUNDATION WORK.

Sri Govind Kumar Gupta
As Constituted Attorney of
Sri Panchanan Banerjee
Sri Bachhu Dey
Smt. Krishna Dey
Smt. Tuku Dey
Smt. Babli Ghosh

GANPATI CONSTRUCTION
Proprietor

M/S GANAPATI CONSTRUCTION PROPRIETOR SRI GOVIND KUMAR GUPTA C.A OF 1.SRI BACHHU DEY,2.SMT.KRISHNA DEY, 3.SMT.TUKU DEY ,4.SMT.BABLI GHOSH, 5.SRI PANCHANAN BANERJEE

SIGNATURE OF OWNER

PROPOSED G+III STORIED RESIDENTIAL BUILDING AT PREMISES NO. 295, VIDYA SAGAR SARANI, WARD NO.- 123, BROUGH NO. - XVI, KOLKATA-700008, UNDER K.M.C.

NAME OF OWNER - 1.SRI BACHHU DEY, 2.SMT.KRISHNA DEY,3.SMT.TUKU DEY ,4.SMT.BABLI GHOSH,5.SRI PANCHANAN BANERJEE

BHATTACHARYA & ASSOCIATES.
ARCHITECTS, ENGINEERS & INT. DESIGNERS
SKYLARK APARTMENT, GROUND-FLOOR
1099, DIAMOND HARBOUR ROAD
KOLKATA - 700008.
tel + fax : + 91 33 2445-5621
e-mail: architrajib@gmail.com

AREA STATEMENT

PART - A :-
1. ASSESSES NO- 41-123-18-0292-0

2. DETAIL OF DEED OF CONVEYANCE:-
a. BOOK-I, VOLUME- 252, PAGE- 209-218, BEING NO.- 15377,YEAR- 06.10.1991, PLACE - ALIPORE.
b. BOOK-I, VOLUME - 108, PAGE- 243-255, BEING NO.- 3953,YEAR- 23.07.1987, PLACE -ALIPORE.
c.BOOK-I, VOLUME - 1607-2017, PAGE- 250258-250286, BEING NO.- 160708527,YEAR- 20.09.2017,PLACE-A.D.S.R.BEHALA
d.BOOK-I, VOLUME - 1607-2017, PAGE- 250287-250316, BEING NO.- 160708528,YEAR- 20.09.2017,PLACE-A.D.S.R.BEHALA

3. DETAIL OF POWER OF ATTORNEY:-
a.BOOK-I, VOLUME - 1902-2017, PAGE- 4779-4806, BEING NO.- 169200159,YEAR- 09.01.2017,PLACE-D.S.R-II
b.BOOK-I, VOLUME - 1902-2017, PAGE- 16232-16257, BEING NO.- 169200584,YEAR-30.01.2017,PLACE-D.S.R.II

PART-B:
1. AREA OF LAND:-
AS PER TITLE DEED(03K.-12 CH.-40 SFT.) = 254.553 SQM.
2. AS PER BOUNDARY DECLARATION (03K.-12CH.-33 SFT.) = 253.964 SQM.
3. (i) PERMISSIBLE GROUND COVERAGE (58.201%)=147.81 SQ.M.
(ii) PROPOSED GROUND COVERAGE = 136.658 SQ.M.
4. PROPOSED HEIGHT = 12.475 M.
5. ROAD WIDTH 4.267 M. (K.M.C.)

5. PROPOSED AREA :-

	COVERED AREA	LIFT WELL+CUT OUT	STAIR+LIFT LOBBY	NET FLOOR AREA
GROUND FLOOR	136.483 SQ.M		10.340+2.240 = 12.580 SQ.M	115.883 SQ.M
1ST. FLOOR	139.047 SQ.M	1.937+2.389 = 4.326 SQ.M	10.340+2.240 = 12.580 SQ.M	122.141 SQ.M
2ND. FLOOR	139.047 SQ.M	1.937+2.389 = 4.326 SQ.M	10.340+2.240 = 12.580 SQ.M	122.141 SQ.M
3RD. FLOOR	139.047 SQ.M	1.937+2.389 = 4.326 SQ.M	10.340+2.240 = 12.580 SQ.M	122.141 SQ.M
TOTAL	545.624 SQ.M	12.978 SQ.M	50.320 SQ.M	482.306 SQ.M

6. TENEMENTS & CAR PARKING CALCULATION :-

MARKED	TENEMENT SIZE	PROPORTIONAL AREA TO BE ADDED	ACTUAL TENEMENT AREA	NO. OF TENEMENT	REQUIRED CAR PARKING
A	43.727 SQ.M	6.82 SQ.M	50.548 SQ.M	3	2
B	76.696 SQ.M	11.913 SQ.M	88.609 SQ.M	2	
C	35.304 SQ.M	3.831 SQ.M	39.135 SQ.M	1	
D	46.563 SQ.M	7.353 SQ.M	55.916 SQ.M	1	
E	30.036 SQ.M	4.547 SQ.M	34.583 SQ.M	1	
F	40.836 SQ.M.	6.182 SQ.M	47.012 SQ.M	1	

7. TOTAL REQUIRED CAR PARKING = 2NO.
8. TOTAL PROVIDED CAR PARKING =2 NOS.
9. PERMISSIBLE F.AREA FOR PARKING = 52 SQ.M.
10. PROVIDED AREA OF PARKING = 38.314 SQ.M.
11. PERMISSIBLE F.A.R = 1.75
12. PROPOSED F.A.R = 482.306 - 38.314 / 253.964 = 1.748
13. STAIR HEAD ROOM AREA = 13.065 SQ.M.
14. LIFT MACHINE ROOM AREA = 5.893 SQ.M.
15. OVER HEAD TANK AREA = 7.8 SQ.M.
16. AREA OF CUP-BOARD = 6.137 SQ.M.
17. AREA OF LOFT = 7.936 SQ.M.

DRAWN BY- M.D.-28.09.18